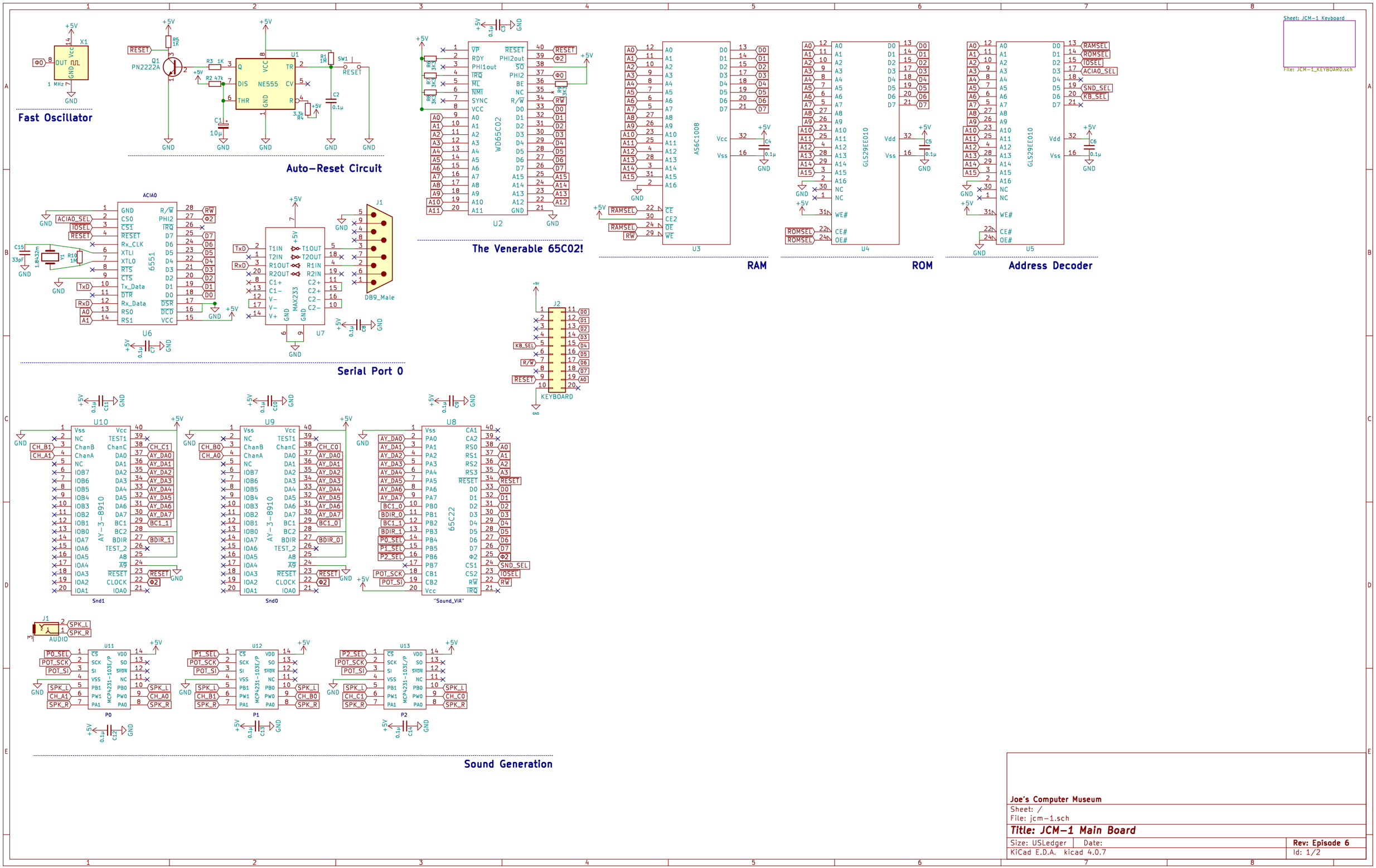
Fast Oscillator
Auto-Reset Circuit
The Venerable 65C02!
RAM
ROM
Address Decoder
Serial Port 0
Sound Generation
Sheet: JCM-1 Keyboard
File: JCM-1_KEYBOARD.sch
Joe's Computer Museum
Sheet: /
File: jcm-1.sch
Title: JCM-1 Main Board
Size: USLedger
Date:
Rev: Episode 6
KiCad E.D.A. kicad 4.0.7
Id: 1/2

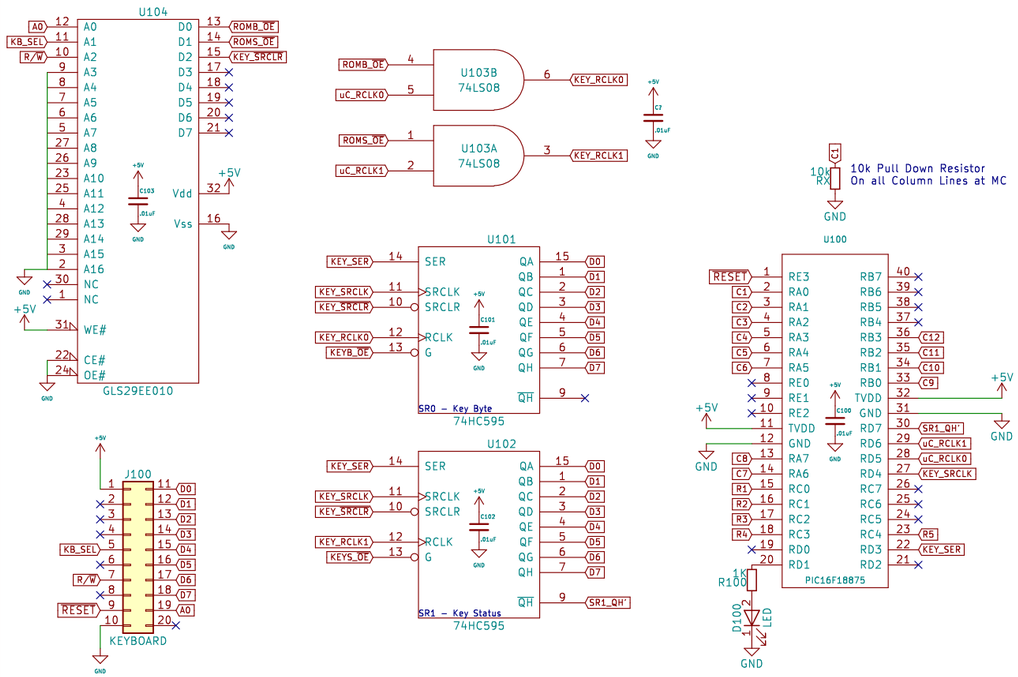

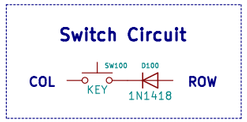

Switch Matrix

	C1	C2	C3	C4	C5	C6	C7	C8	C9	C10	C11	C12
R1	ESC	1	2	3	4	5	6	7	8	9	0	–
R2	TAB	Q	W	E	R	T	Y	U	I	O	P	[
R3	Caps Lock	A	S	D	F	G	H	J	K	L	;	'
R4	SHIFT	Z	X	C	V	B	N	M	,	.	/	]
R5	CTRL	ALT	'	SPACE	◀	▶	▲	▼	\	DEL	=	RET

Sheet: /JCM-1 Keyboard/
File: JCM-1_KEYBOARD.sch

Title:

Size: USLedger	Date:	Rev:
KiCad E.D.A. kicad 4.0.7		Id: 2/2